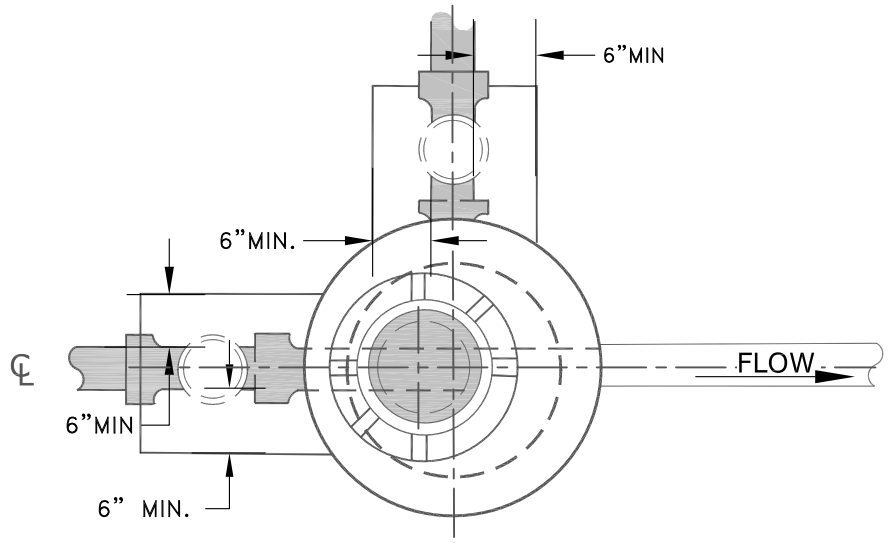

PLAN

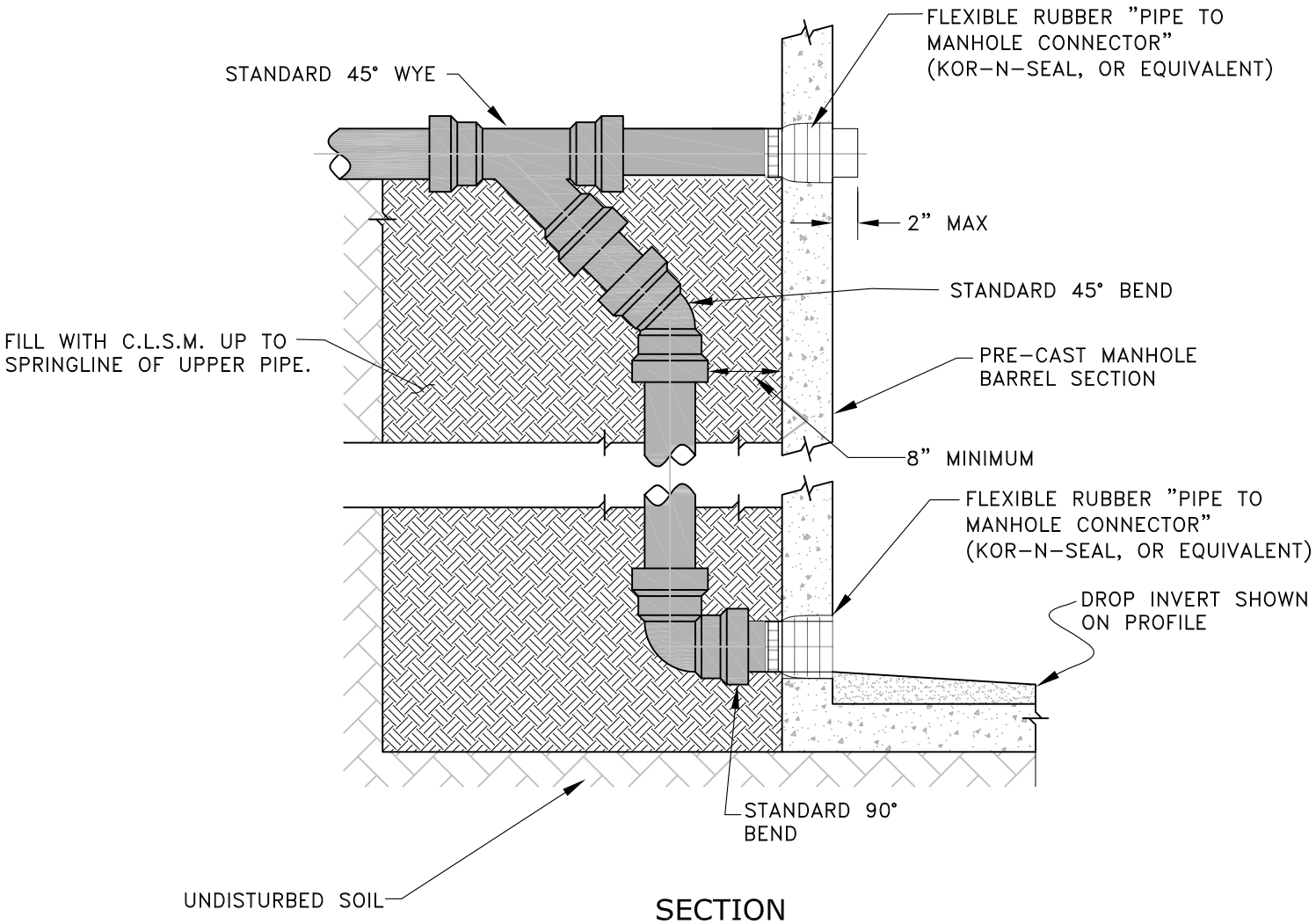

SECTION

City of Lake Oswego
Engineering Division
Erica Rooney, P.E. City Engineer

OUTSIDE DROP MANHOLE

EFFECTIVE DATE: JANUARY 1, 2018 NOT TO SCALE

WW1-05

DRAWING NUMBER